ZONE	REV.	REVISIONS DESCRIPTION	DATE	APPROVED

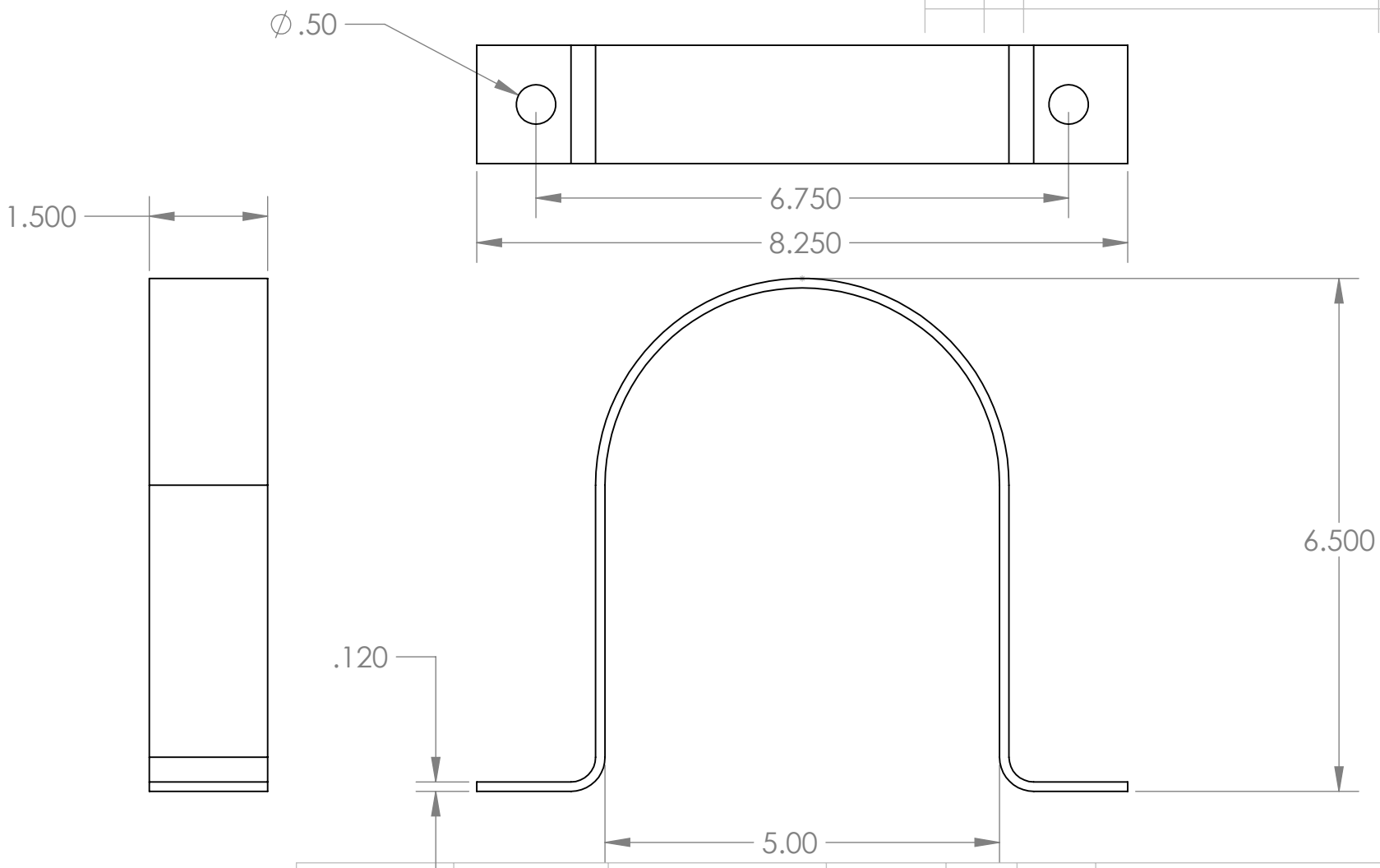

		UNLESS OTHERWISE SPECIFIED:		NAME	DATE
		DIMENSIONS ARE IN INCHES TOLERANCES: FRACTIONAL ± ANGULAR: MACH ± BEND ± TWO PLACE DECIMAL ± THREE PLACE DECIMAL ±	DRAWN	RM	8/3/2016
			CHECKED		
			ENG APPR.		
			QUANTITY:		
		INTERPRET GEOMETRIC TOLERANCING PER:	COMMENTS:		
		MATERIAL			
NEXT ASSY	USED ON	FINISH			
APPLICATION		DO NOT SCALE DRAWING			

MAD DOG METAL INC

TITLE:

Hangar

SIZE	DWG. NO.	REV
A		
SCALE:	Weight lb	SHEET 1 OF 1

PROPRIETARY AND CONFIDENTIAL

THE INFORMATION CONTAINED IN THIS DRAWING IS THE SOLE PROPERTY OF MAD DOG METAL INC. ANY REPRODUCTION IN PART OR AS A WHOLE WITHOUT THE WRITTEN PERMISSION OF MAD DOG METAL INC. IS PROHIBITED.

5 4 3 2 1